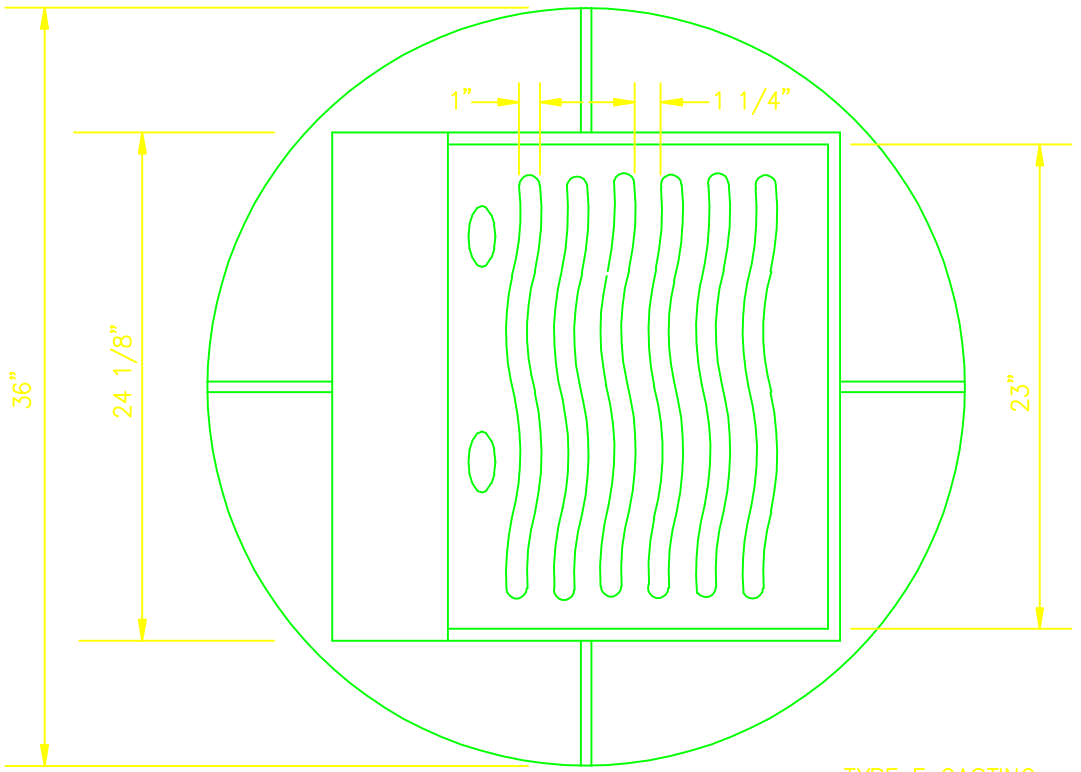

TYPE E CASTING
NEENAH R-3010 OR
EAST JORDAN 7010

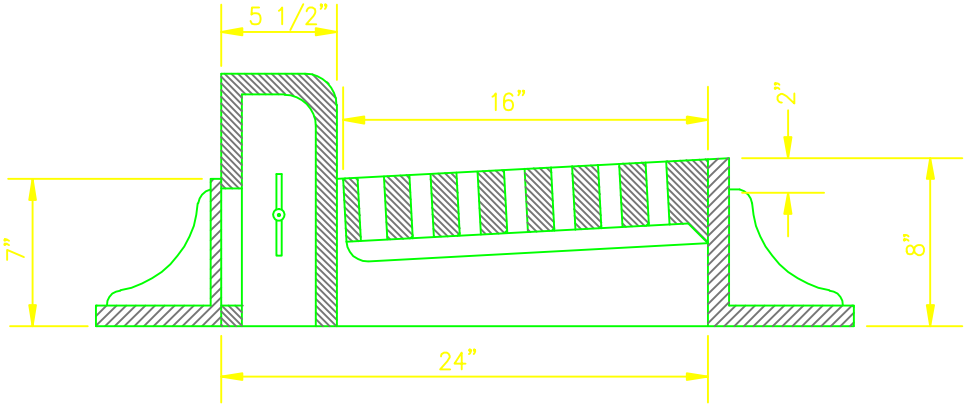

HUNTINGTON STORMWATER UTILITY DEVELOPMENT MANUAL

CASTING DETAILS		
CURB CASTING DETAIL TYPE E		
SCALE: NONE	DATE: JAN. 2005	DWG. NO. C – 3