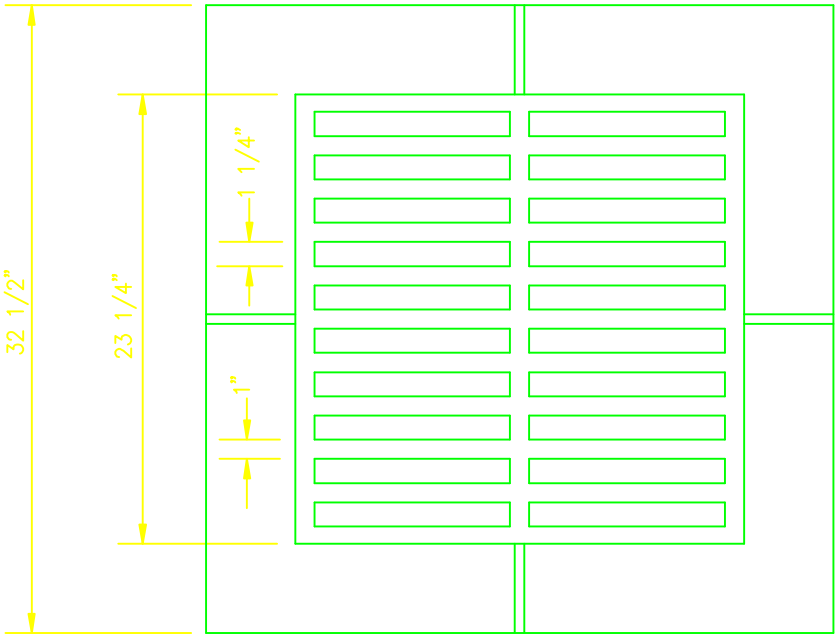

TYPE D CASTING
SHALL BE NEENAH
R-3501-N OR EAST
JORDAN 7490

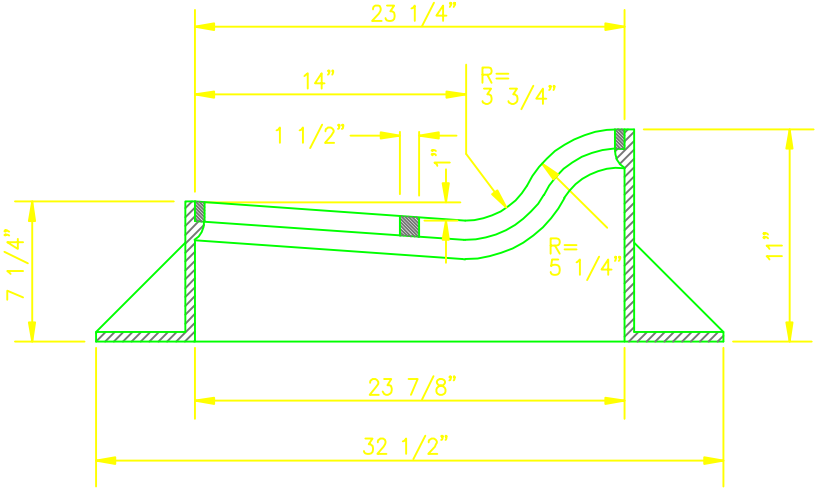

HUNTINGTON STORMWATER UTILITY DEVELOPMENT MANUAL

CASTING DETAILS

STANDARD CASTING DETAIL – ROLLED CURB TYPE D

SCALE: NONE	DATE: JAN. 2005	DWG. NO. C – 2