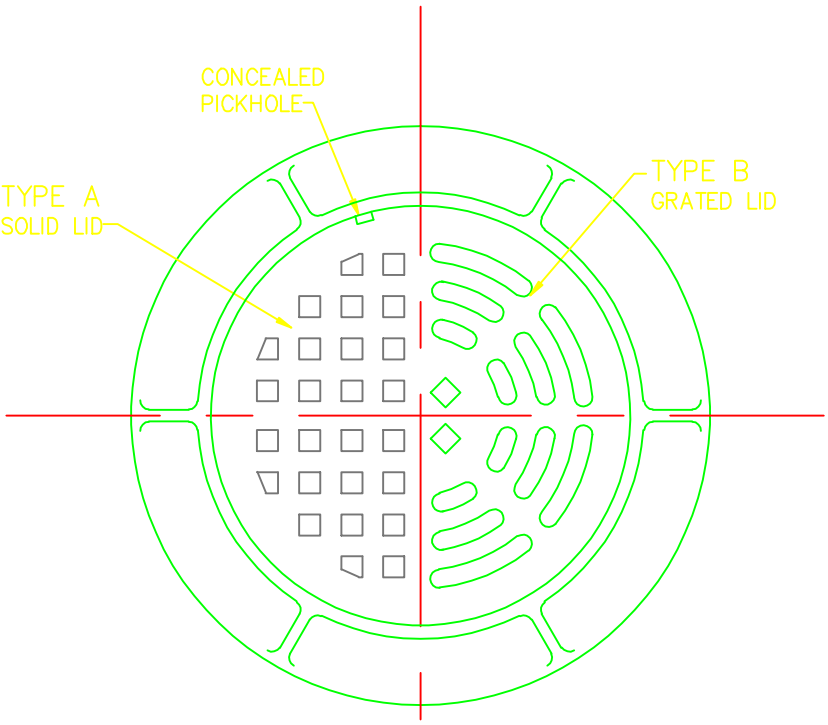

TYPE A CASTING
NEENAH R-1642 OR
EAST JORDAN 1045
LID SHALL BE HEAVY
DUTY WITH SELF SEALING GASKETS

TYPE B CASTING
NEENAH R-2371 OR
EAST JORDAN 1045
WITH M1 GRATE

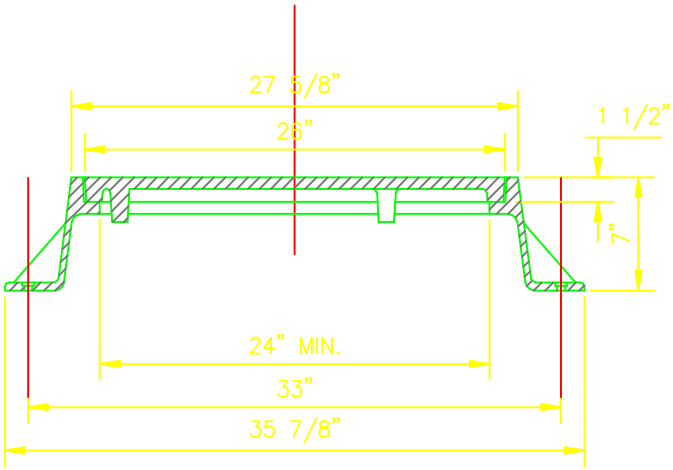

HUNTINGTON STORMWATER UTILITY DEVELOPMENT MANUAL

CASTING DETAILS		
TYPE A OR B CASTING DETAIL		
SCALE: NONE	DATE: JAN. 2005	DWG. NO. C - 1