TYPE M CASTING
NEENAH R-3287-10V
EAST JORDAN 7505 MI & T2

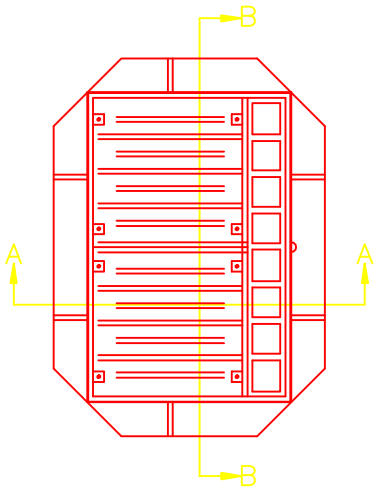

PLAN

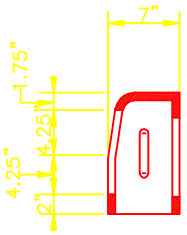

CURB BOX SECTION

* Galvanized or stainless steel 3/4"-10 UNC x 3 1/2" round head, Square shouldered bolts with 1 flat washer, 1 lock washer and 1 nut each.

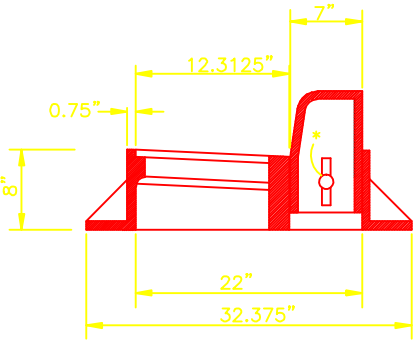

SECTION "A-A"

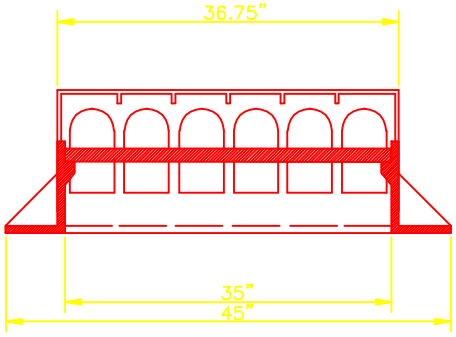

SECTION "B"-B"

FIN DETAIL

TO BE USED WITH TYPE III INLET

HUNTINGTON STORMWATER UTILITY DEVELOPMENT MANUAL

CASTING DETAILS		
TYPE M CASTING		
SCALE: NONE	DATE: JAN. 2005	DWG. NO. C - 9