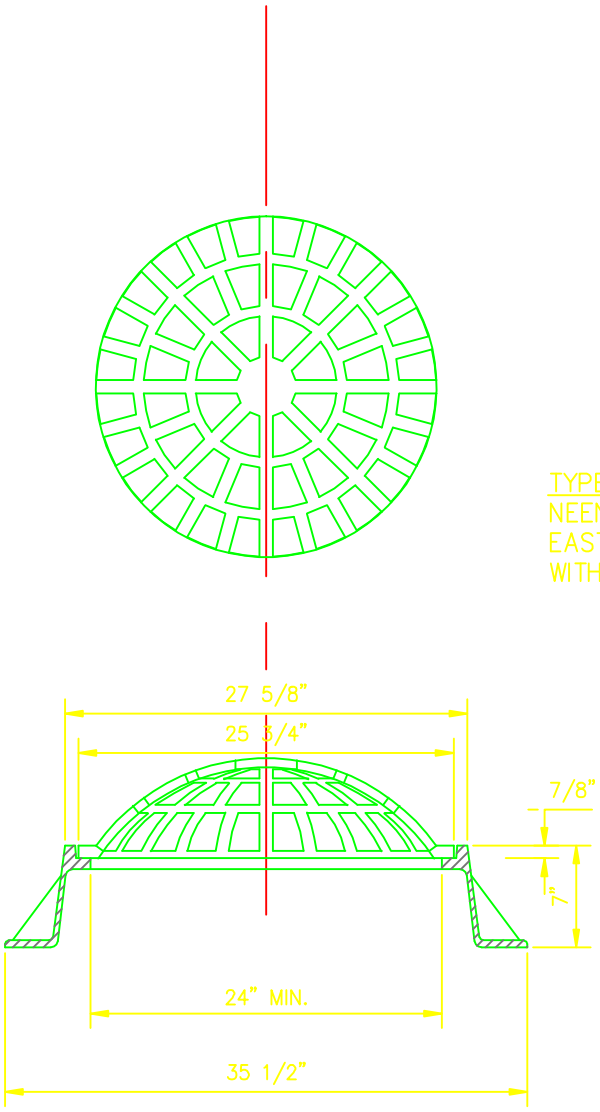

TYPE G CASTING
NEENAH R-2560-E1 OR
EAST JORDAN 1045
WITH O2 GATE

HUNTINGTON STORMWATER UTILITY DEVELOPMENT MANUAL

CASTING DETAILS		
TYPE G CASTING DETAIL		
SCALE: NONE	DATE: JAN. 2005	DWG. NO. C - 5