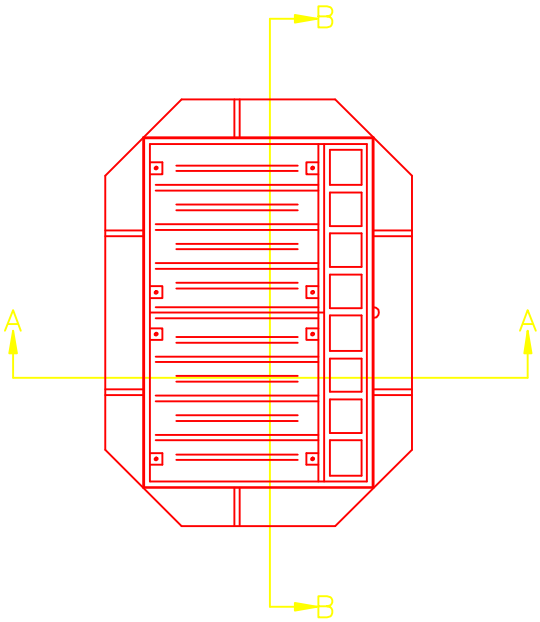

PLAN

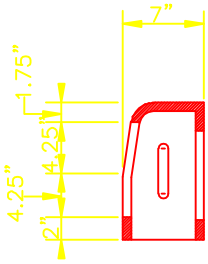

CURB BOX SECTION

TYPE L CASTING
NEENAH R-3287-15 OR
EAST JORDAN 7565 TI

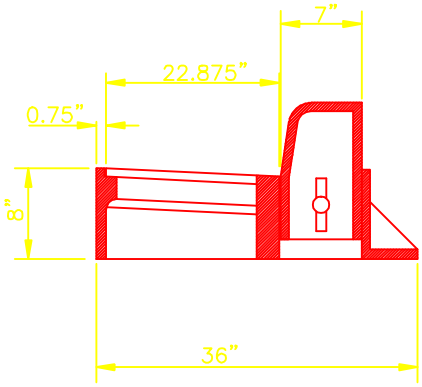

SECTION "A-A"

TO BE USED WITH TYPE II INLET

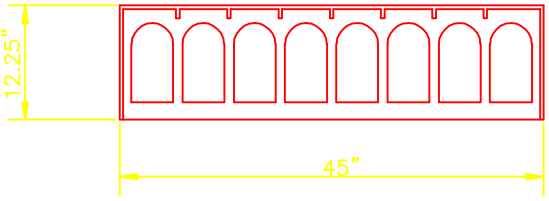

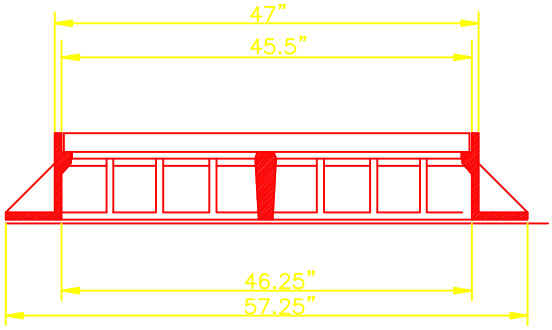

SECTION "B"-B"

HUNTINGTON STORMWATER UTILITY DEVELOPMENT MANUAL

CASTING DETAILS		
TYPE L CASTING		
SCALE: NONE	DATE: JAN. 2005	DWG. NO. C - 8