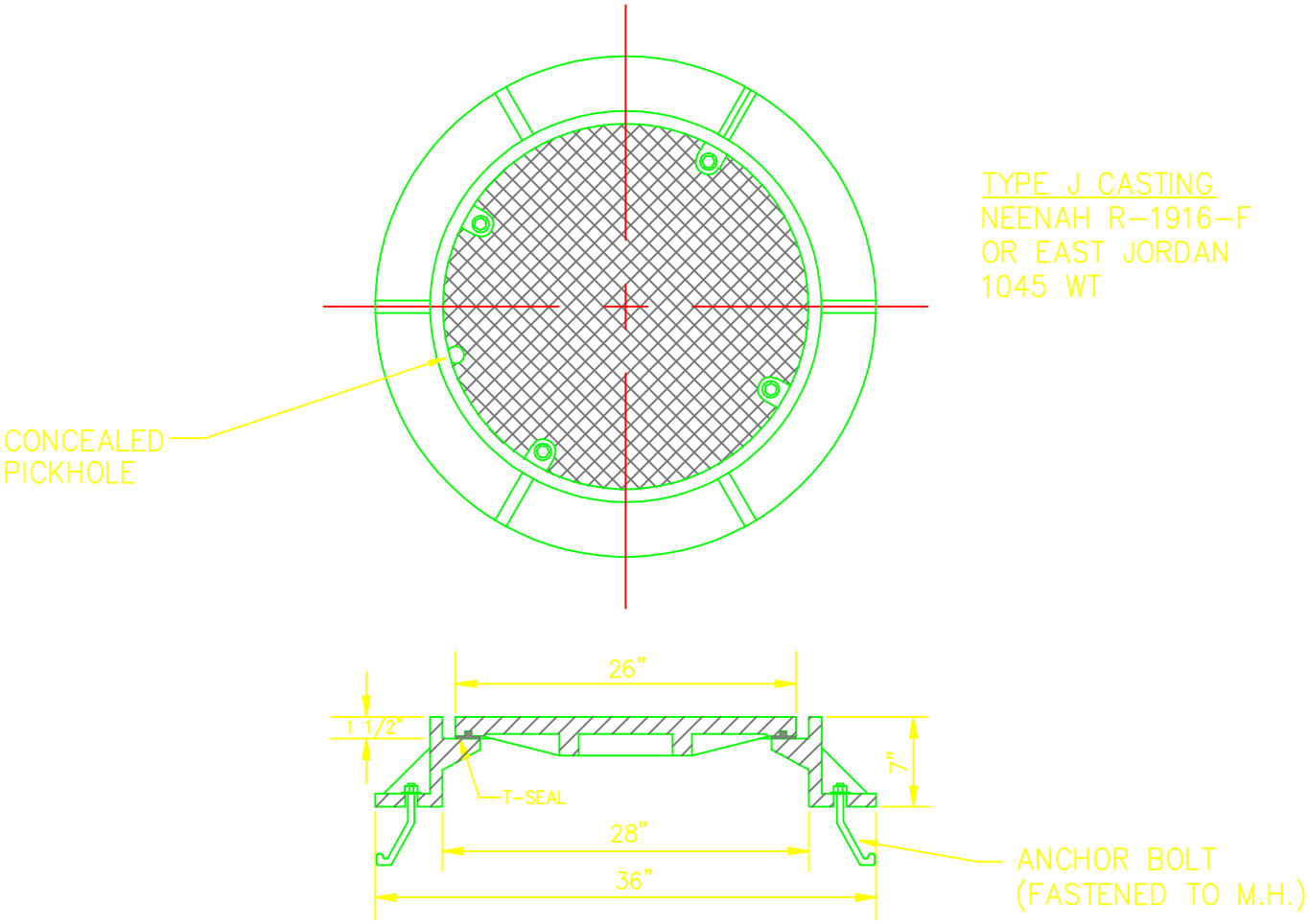

HUNTINGTON STORMWATER UTILITY DEVELOPMENT MANUAL

CASTING DETAILS		
TYPE J WATERPROOF MANHOLE FRAME W/BOLTED LID		
SCALE: NONE	DATE: JAN. 2005	DWG. NO. C - 6