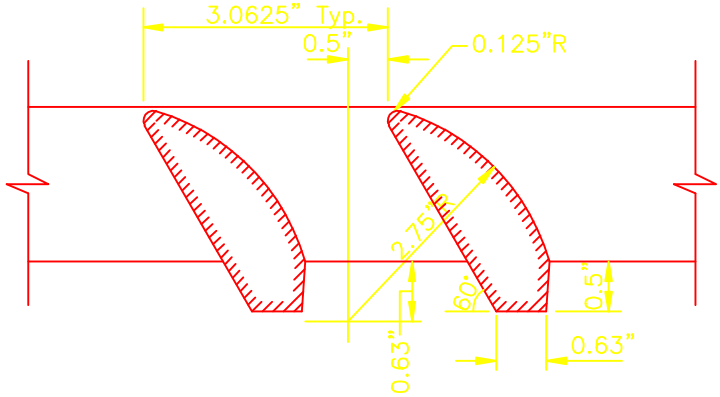

TYPE L CASTING
NEENAH R-3287-15 OR
EAST JORDAN 7565 TI

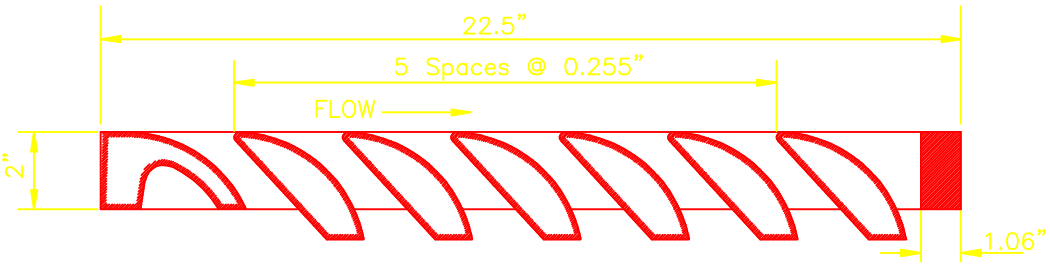

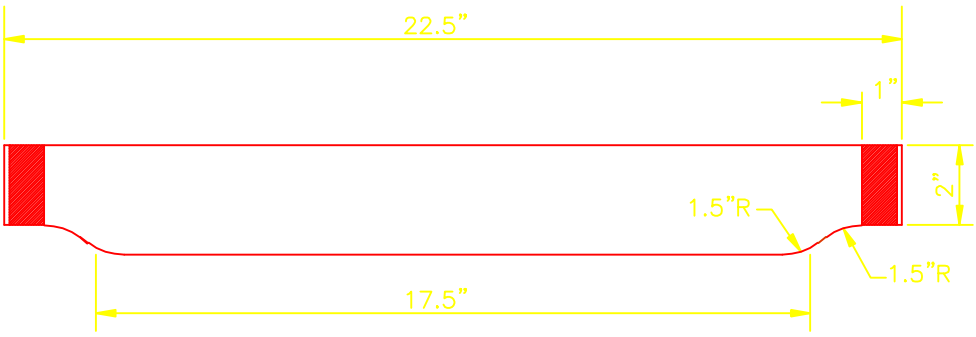

HUNTINGTON STORMWATER UTILITY DEVELOPMENT MANUAL

CASTING DETAILS		
FIN DETAIL FOR TYPE L CASTING		
SCALE: NONE	DATE: JAN. 2005	DWG. NO. C – 8A