TYPE H CASTING
NEENAH R-3286-8V OR
EAST JORDAN 7520 T1
WITH M GRATE

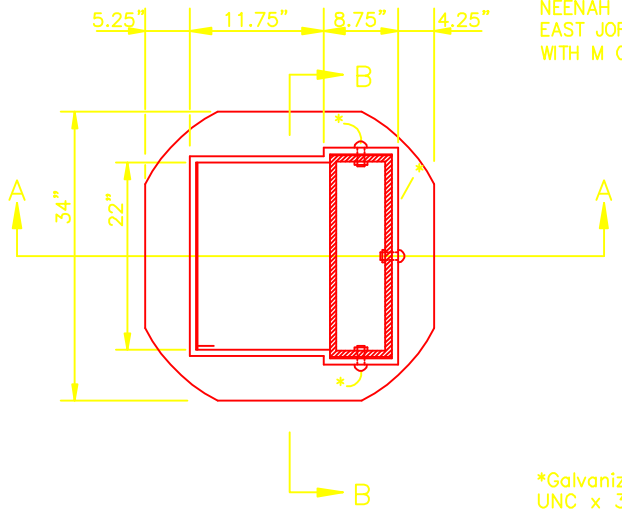

*Galvanized or stainless steel 3/4"-10 UNC x 3 1/2" round head, Square shouldered bolts with 1 flat washer, 1 lock washer and 1 nut each.

PLAN

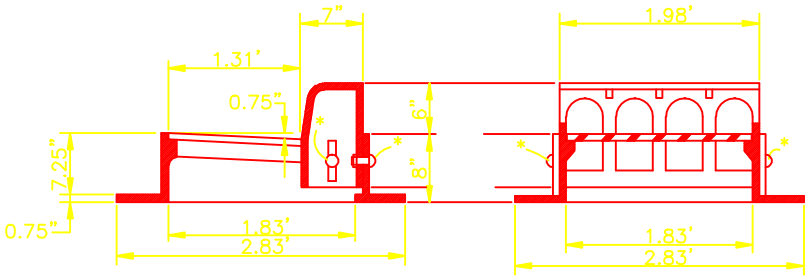

SECTION "A-A"

SECTION "B"-B"

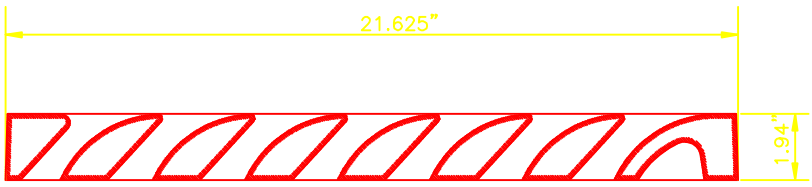

FIN DETAIL

HUNTINGTON STORMWATER UTILITY DEVELOPMENT MANUAL

CASTING DETAILS		
TYPE H CASTING		
SCALE: NONE	DATE: JAN. 2005	DWG. NO. C - 7