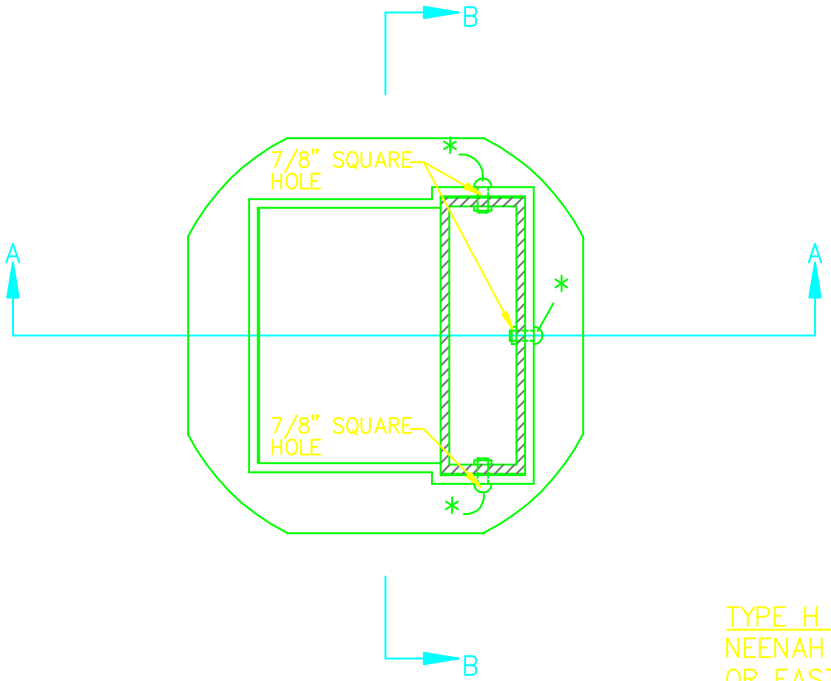

PLAN

* GALVANIZED OR STAINLESS STEEL 3/4"-10 UNC X 3 1/2" ROUND HEAD, SQUARE SHOULDERED BOLTS WITH 1 FLAT WASHER, 1 LOCK WASHER AND 1 NUT EACH.

TYPE H CASTING
NEENAH R-3286-8V
OR EAST JORDAN
7520-T1

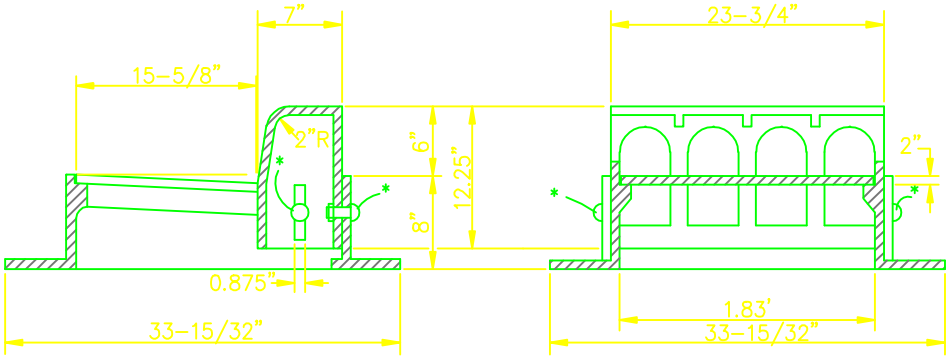

SECTION A-A

SECTION B-B

HUNTINGTON STORMWATER UTILITY DEVELOPMENT MANUAL

CASTING DETAILS		
TYPE H CASTING		
SCALE: NONE	DATE: JAN. 2005	DWG. NO. C - 7A